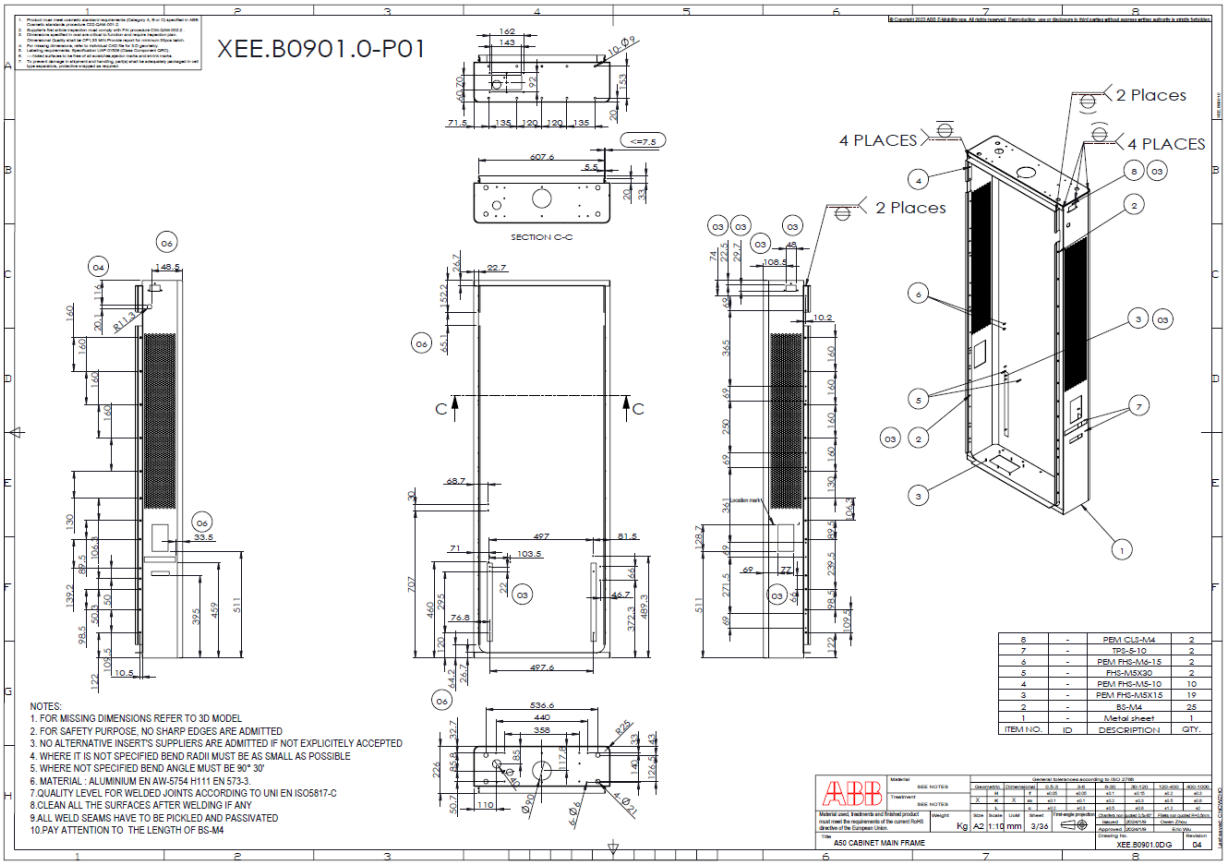
XEE.B0901.0-P01
SECTION C-C
2 Places
4 PLACES
4 PLACES
2 Places
NOTES:
1. FOR MISSING DIMENSIONS REFER TO 3D MODEL
2. FOR SAFETY PURPOSE, NO SHARP EDGES ARE ADMITTED
3. NO ALTERNATIVE INSERT'S SUPPLIERS ARE ADMITTED IF NOT EXPLICITELY ACCEPTED
4. WHERE IT IS NOT SPECIFIED BEND RADII MUST BE AS SMALL AS POSSIBLE
5. WHERE NOT SPECIFIED BEND ANGLE MUST BE 90° 30'
6. MATERIAL : ALUMINIUM EN AW-5754 H111 EN 573-3.
7. QUALITY LEVEL FOR WELDED JOINTS ACCORDING TO UNI EN ISO5817-C
8.CLEAN ALL THE SURFACES AFTER WELDING IF ANY
9.ALL WELD SEAMS HAVE TO BE PICKLED AND PASSIVATED
10.PAY ATTENTION TO THE LENGTH OF BS-M4
ITEM NO. | ID | DESCRIPTION | QTY.
8 | - | PEM CLS-M4 | 2
7 | - | TPS-S-10 | 2
6 | - | PEM FHS-M4-15 | 2
5 | - | FHS-M5X30 | 2
4 | - | PEM FHS-M5-10 | 10
3 | - | PEM FHS-M5X15 | 19
2 | - | BS-M4 | 25
1 | - | Metal sheet | 1
Material
SEE NOTES
Treatment
SEE NOTES
General tolerances according to ISO 2768
Material used, treatments and finished product must meet the requirements of the current RoHS directive of the European Union.
Weight
Kg
Size A2
Scale 1:10
Unit mm
Sheet 3/36
First angle projection
Issued Aug-20-2020
Drawn Zhou
Approved Zeppenfeld
Erlo Wu
Title
A50 CABINET MAIN FRAME
Drawing No.
XEE.B0901.0DG
Revision
04

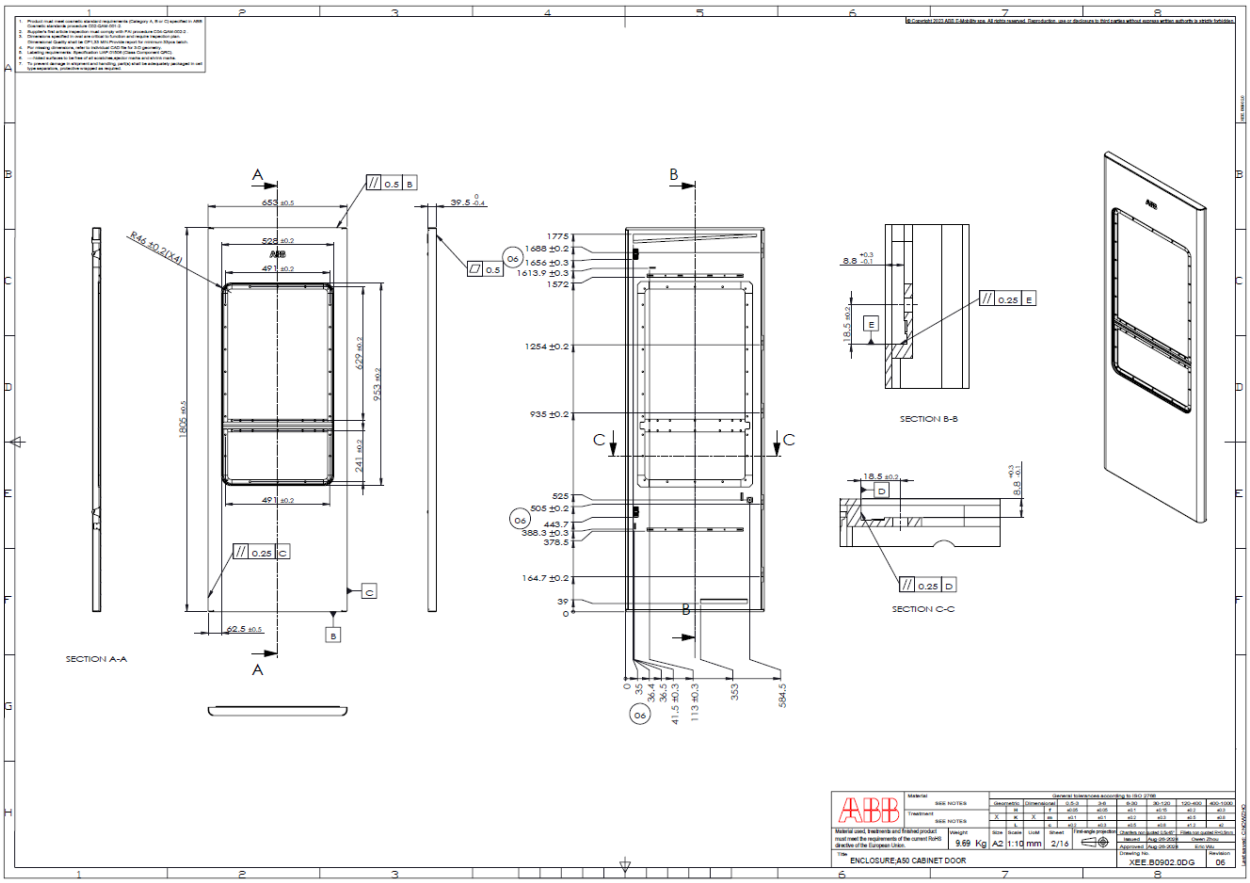
SECTION A-A
SECTION B-B
SECTION C-C
Material
SEE NOTES
Treatment
SEE NOTES
General tolerances according to ISO 2768
Material used, treatments and finished product must meet the requirements of the current RoHS directive of the European Union.
Weight
9.69 Kg
Size A2
Scale 1:10
Unit mm
Sheet 2/16
First angle projection
Issued Aug-20-2020
Drawn Zhou
Approved Aug-20-2020
Erlo Wu
Title
ENCLOSURE;A50 CABINET DOOR
Drawing No.
XEE.B0902.0DG
Revision
06